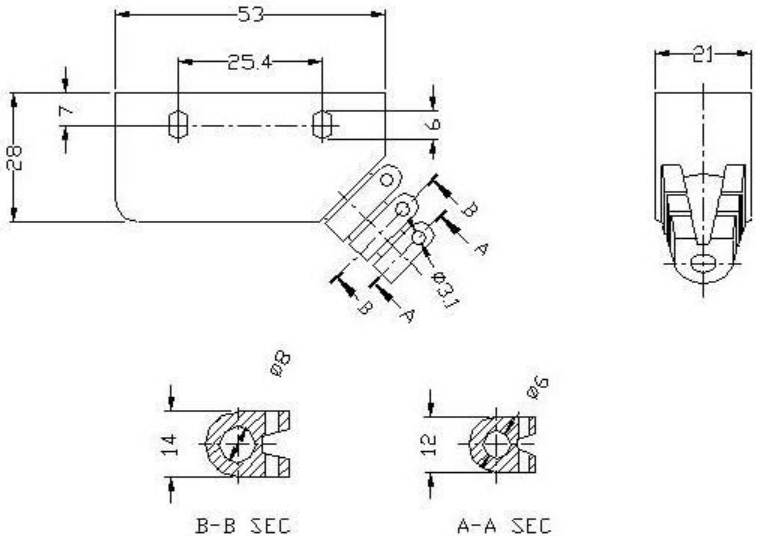

B						
A						
ISS	NOTE	DESCRIPTION	GRID	DRW	APP	DATE

喜威達企業股份有限公司
SWEETA PRODUCTS CORPORATION

TITLE: TERMINAL ENCLOSURES

FINISH: SAA8000

MATERIAL:

DWG NO.: A3

0.000°±0.25°	0.000±0.005	DRAWN ARTHUR	DATE 2003/03/18
0.00°±0.5°	0.00±0.10	CHECKED	DATE
0.0°±1°	0.0±0.20	APPROVER	DATE
0°±2°	0±0.50	SCALE 2.5 : 1	
ANGULAR	LINEAR		
TOLERANCE			