REVISIONS				
LTR	DESCRIPTION	DATE	REVISED	APPROVED

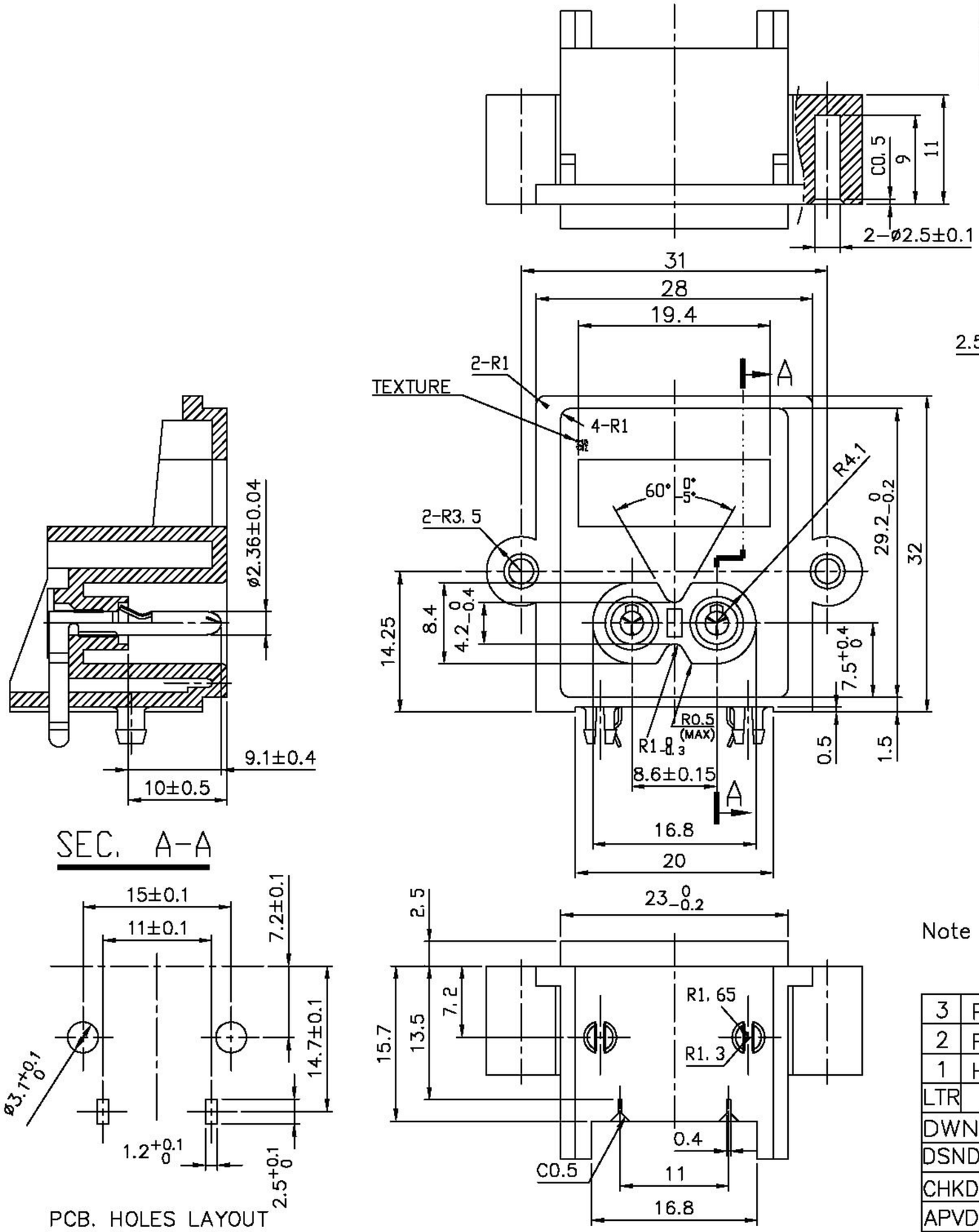

Note : Approved Standard : VDE FILE No.1550600-1550-0005/56878

LTR	PART NAME	QTY	MATERIAL	REMARK
3	PIN-2	1	C2680 ; t=0.3	MBCu2-Sn3
2	PIN-1	1	C2680 ; t=0.3	MBCu2-Sn3
1	HOUSING	1	PPO.(BLACK)	GE 1005

DWN	JOLLY	DATE	2005.11.30	SCALE /	NAME AC POWER SOCKET
DSND	L.D	DATE	2005.12.01	3RD ANGLE PROJECTION	
CHKD	YT Chiang	DATE	2005.12.01		CAT. NO. SWHJC-028S-P
APVD	ERIC	DATE	2005.12.01	UNIT: mm	

SWEETA PRODUCTS CORPORATION

DWN.NO. A-028S-P 1/1 A

UNLESS OTHERWISE SPECIFIED, TOLERANCE ON DECIMAL: ±0.3 ANGLES: ±5°