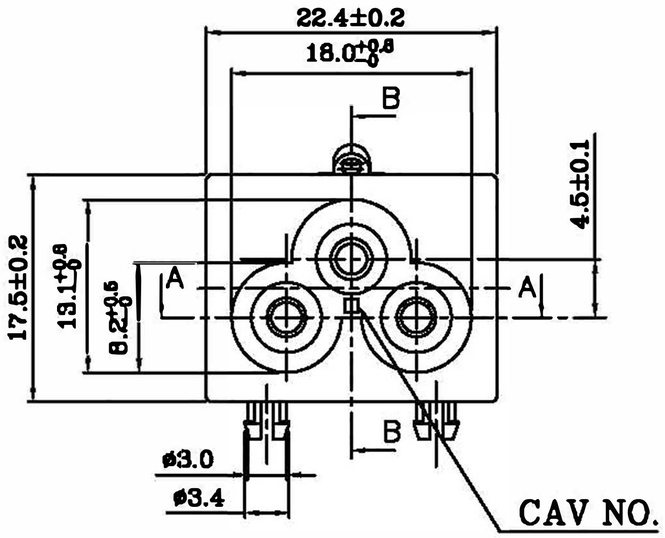

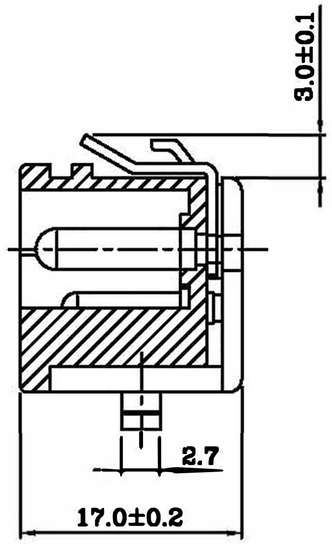

B–B SECTION

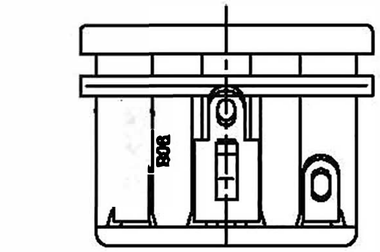

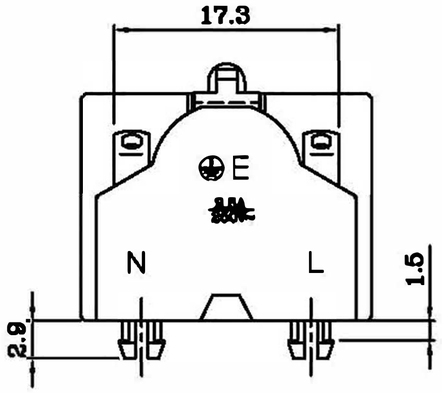

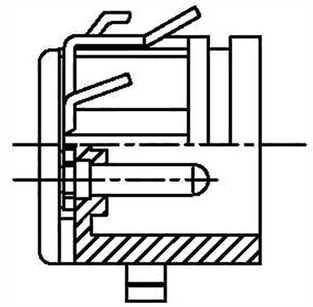

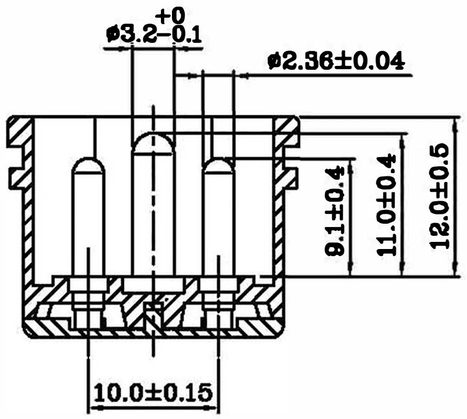

A–A SECTION

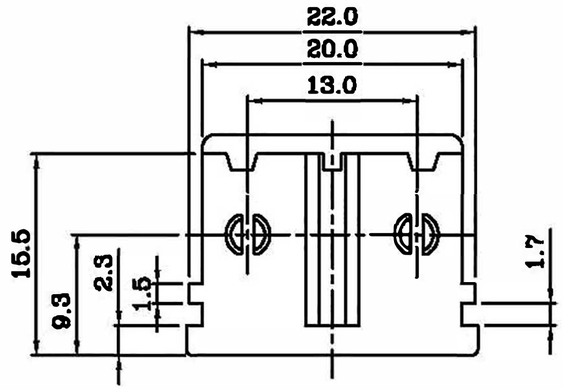

SPECIFICATION:

1. INSULATION RESISTANCE: OVER 100MΩ 500V DC.
2. DIELECTRIC STRENGTH: 2000V AC ONE MINUTE.
3. Body Materil: Black Glass–Filled Thermoplastic . UL 94V–2~0

Rating: AC 2.5A 250V	
Mark	Safety Regulation
cFLus	cULus
	CCC
	VDE
	ENEC

IMPORTANT THIS DRAWING FOR REFERENCE ONLY 注意：此圖只供參考用

喜威達企業股份有限公司
SWEETA PRODUCTS CORPORATION
23552新北市中和區中正路799號1樓
1F,No.799,Chung Cheng Road,Chung Ho Dist,New Taipei City,Taiwan 23552 R.O.C.
TEL:886-2-2226-8001 FAX:886-2-2226-8002
http://www.sweeta.com.tw sweeta.tw@msa.hinet.net

UNIT	UNIT QTY	SCALE	TOLERANCE	X.XX±0.1 XX.XX±0.2 XXX.XX±0.3	PRODUCT NO.	SWR-30790(B08)	REV
mm	1	1:1					
DRAWN BY 李 2010.9.03 小英	APPROVED BY 羅 2010.9.03 士凱		ID NO	10090313Q	INTERIM NO.		B
			DESCRIPTION		NEW NO.		